GSM-based Embedded Water Meter System

Hesham H. Hallal[1], May Haidar[2], Taha Barake[1],
Sami AlKhaldi[3], Mohammad AlOrayfij[3], Amal AlBalawi[2], Raneem Aljehani[2]
[1]Department of Electrical Engineering
[2]Department of Computer Science
[3]Department of Computer Engineering
Fahad Bin Sultan University, Tabuk, Saudi Arabia P.O.Box 15700, Tabuk 71454

Abstract - *We present an embedded system implementation of a wireless water meter system. The deployment of the proposed system uses the existing GSM network, where the water meter system can send its readings directly to a server application using a GSM modem. The application itself can notify subscribers of their bills using SMS messages as well.*

Keywords: Embedded Systems, Water Meter, Smart Home, GSM

1 Introduction

Water resources around the world are getting scarcer day after day. Climate, global warming, and irresponsible usage are major factors the make the situation even harder.

In the absence of any real solution for global warming, governments are putting large efforts to compensate for the shortage of water either through awareness campaigns to reduce consumption or through more taxes on usage of water. While raising awareness is usually a long process that requires a lot of resources, increasing usage fees is highly dependent on the availability of human resources to make measurements and collect appropriate fees.

An alternative, more practical, solution consists of reusing existing technologies that are already deployed in other fields, where the results are promising. The main idea is to customize existing solutions to the context of water billing and usage management. The proposed approach in this paper relies on two main technologies that have made significant contributions to wellbeing of individuals and societies: Application specific embedded systems and the Global System for Mobile Communications (GSM). The latter has been increasingly used in different applications ranging from phone calls to Internet browsing and remote control of electronic, electrical, and mechanical devices [7]. Meanwhile, applications based on embedded systems are also being introduced almost in every domain, especially for purposes of cost reduction and portability. Examples of such applications include watches, microwave ovens, cars, digital cameras, and security systems. In additions, networks of embedded wireless sensors are being used in many [2] domains like weather forecasting and smart home development.

In this paper, we propose a system to automate the billing of the consumption of water and the control of the water meters using a blend of both technologies: GSM networks and embedded systems. The proposed system consists of three main components:

1. Embedded water meter (E-WATER) system for measurement and control of water consumption.

2. Server application to manage the measurements and prepare invoices and bills. In addition to that, the application performs some predefined control operations that can be transmitted to the embedded water meter.

3. Communication medium that is based on the existing GSM networks. The water billing and control operations will be performed simply using the Short Messaging System service that is available over GSM. For this, no modification or even customization is needed in the networks themselves.

Automating the billing process remains an appealing objective especially with tendency of governments in many countries to go electronic

(paperless). Some proposals already exist to automate the billing of some basic services like water, gas, phone, and electricity. In [1], a proposal is presented to combine in one meter the measurements of all the services needed for a house. The proposed system relies on a microcontroller for the readings but requires the user to pay on site with his credit card. This means the meter system needs to host the hardware and software necessary to complete a credit card transaction. In addition, the proposed system does not allow any remote control of the meter of any sort.

Recently, some implementations of remote water meter systems have reached a commercial level like in the case of [5], where a mixed RF/GPRS network is used to convey the readings of the meter to the billing center. The use of GPRS for communications makes possible to access meter information online from any place with Internet access. The use of both RF and GPRS in the same network for the reading system adds to the complexity of the system, especially in terms of adapting the protocols on both sides. Another commercial example of water meter systems is the IkTech [6], which involves using a point to point communication system between the meter and a mobile reader from which collected readings can be downloaded to a central system with a billing/management application. The proposed system still requires human intervention to do the reading though not from each and every meter in a large network. In additions to the limitations mentioned in both cases, the idea of controlling the meter remotely is absent, which makes the system proposed in this paper a proper solution. In particular, the possibility of controlling the meters remotely adds to the range of services that could be offered along with the system. For example, it is possible control the water supply to regions hit by disasters or contamination. In addition, services like suspending the account or reducing/increasing supply become possible.

The remainder of this paper is organized as follows. Section 2 describes the architecture of the proposed system. Section 3 describes the embedded system implementation of the water meter. Section 4 presents the software application of the system. Finally, Section 5 concludes the paper.

2 Architecture of the GSM-based Water Billing System

Figure 1 shows the architecture of the automated water billing system. The system consists of three main components:

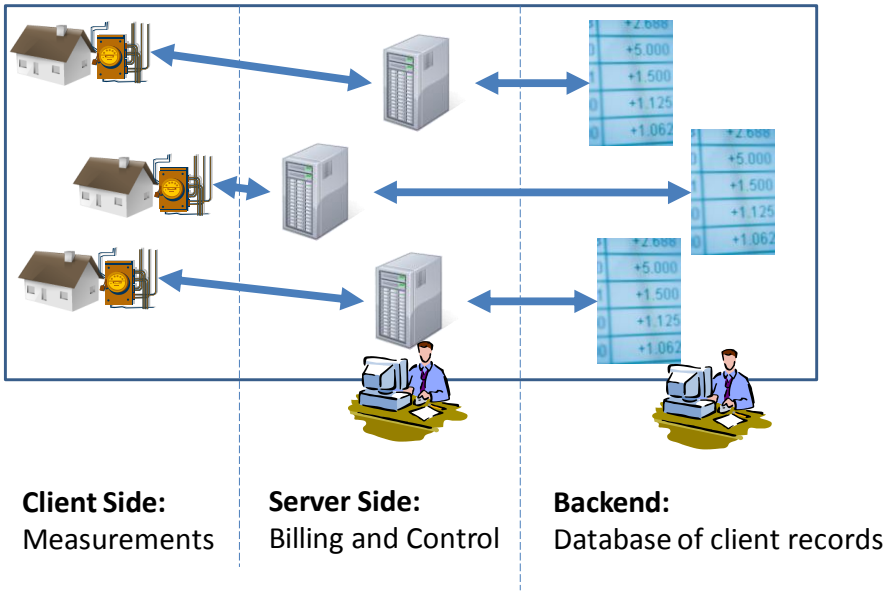

Figure 1. Architecture of the automated water billing system.

1. Embedded water meter system [2] has the responsibility of providing the reading and filtering of data while receiving control commands and executing them. We denote this system E-WATER for Embedded WAter meTER.

2. Server application has the task to receive the readings from the E-WATER system and process the information by accessing a database at the backend. The application on the server has two main modules:
   a. Database access module that handles the records of different E-Water systems.

   b. Control module that receives instructions from a user, translates them into commands, and transmits the commands to the E-WATER system, which executes them on site. Such commands might include closing the supply and changing the type of reading or its frequency.

3. GSM network for communication between the E-Water systems and the server application. The communications is possible between the server applications and the subscribers directly by sending them SM messages about their consumption and bills.

The communication between the E-WATER system at the client side and the server application is carried out over the existing GSM networks using the SMS standard/protocol. In the following, we detail the description of the components of the proposed system.

3 E-WATER System

The E-WATER system, Figure 2, consists of a water flow sensor (e.g., Signet 515 Rotor-X Flow sensor [4]), microcontroller, memory, LCD display, GSM modem, and a power supply.

Using a microcontroller, e.g., PIC16F876A [3] which is programmable in both assembly and C language, is driven by the need to start managing the billing at the client side and to control the flow of water. The former includes changing the reading process from time to time, displaying preliminary information on the bill to the client. The interface of the E-WATER system with the external world, mainly the server application, is implemented using the GSM modem (interfaced to the microcontroller using a MAX232 converter) that is capable of sending SMS messages in which the microcontroller can report the readings and related data. The F1003 modem is a primary for its availability and relatively reduced cost. The control part of the operation, meanwhile, can be initiated either by the client or by the user of the software application. In either case, the GSM modem will receive a command to change the status of the E-WATER system. Examples of such control operations include: shutting down the supply for emergency reasons, minimizing the flow for payment problems, changing the frequency of sending the readings to the station, and changing the flow based on the request of the user. In general, this control process is divided into two parts. In the first, the software application generates a command and sends it as SMS to the GSM modem of the E-WATER system. In the second phase, the microcontroller converts the control command into signals that pass through actuators and physically change the status of the flow sensor.

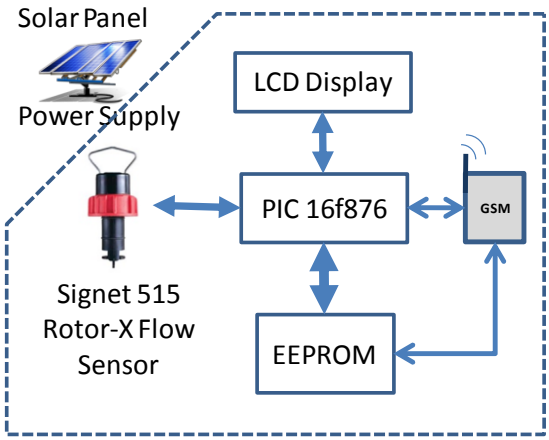

Figure 2. Design of the E-WATER system.

In order to optimize the use of the GSM modem and control the number of SMS messages exchanged, the microcontroller uses a memory unit, the 24LC16B EEPROM, to save the readings obtained from the flow sensor. Based on the type of program executed by the microcontroller it can select specific data from the memory unit and send it to the server via the GSM modem at different intervals. In addition, the microcontroller drives an LCD display to show the readings at a programmable pre-defined rate. To save power, the display will be

off by default unless selected otherwise. The power supply of the E-WATER system is a combination of long term battery and a solar panel based supply. The solar power supply is the default source of power with the battery acting as backup for when the sun light is reduced or at night.

4 Server Application

The software application has two main functions:

1. Processing the readings of the E-WATER system received via GSM communication. The main objective is billing and statistics. The main role of this module is to process the readings of the E_WATER system and prepare bills and reports on the types and amounts of usage for different clients. A database is designed to host the records for the different clients. Figure 4 shows the Entity Relationship (ER) diagram of the proposed database. The proposed database consists of four main tables: Customer, Invoice, Reading, and Rate.

The proposed database structure will be distributed to areas of supply. This approach keeps the databases of manageable sizes and allows for ease of interface. In addition, the distributed approach ensures efficiency in using the existing communication networks. Currently our objective is to respond to the need for a data storage model where different records of clients can be easily accessed. In the future, the proposed database can be extended to include variety of data that is useful to different types of reports like the area where the client is located, the fines a client receives for delayed payments, as well as various other records belonging to the same client.

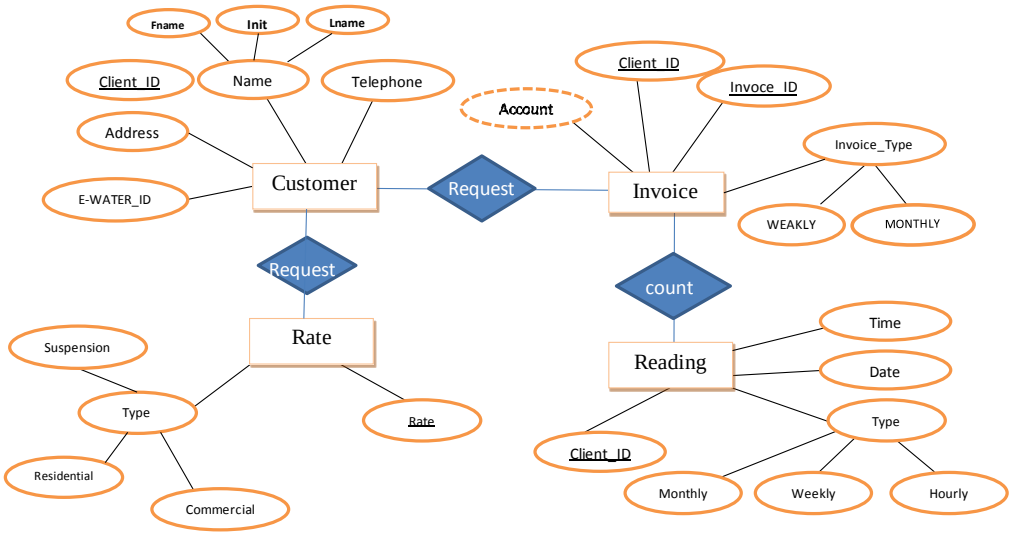

Figure 3. Entity Relationship diagram of the client DataBase.

2. Controlling the E-WATER system based on predefined commands executed a user who can control the E-WATER system remotely with some predefined commands that should be used only in specific situations as discussed earlier in Section 3. These commands include two main sets:

   a. Managing the water supply such as turning it off upon the client's request.

   b. Changing the frequency of readings; e.g., from hourly to daily.

5 Conclusion

We presented a system for water billing and consumption management based on an embedded system implementation of the water meter that is capable of reporting readings over

the GSM network to a server application capable of billing and of controlling the meter itself.

The proposed system can be extended as follows: other sensors for other services (telephone, electricity, and gas) can be included in the E-Water system. Another future step is to evaluate the use of the GSM network databases and billing procedure instead of building a separate database and server application. This makes the water invoice/bill look like just adding a new phone bill for the customer.

Acknowledgement: We acknowledge the contributions of Ahmad Hattab, Firas Hoteit, and Farah Kourdi.

References

[1]. Al-Qatari, S. A.; Al-Ali, A. R. Microcontroller-based Automated Billing System. In Proceedings of International IEEE/IAS Conference on Industrial Automation and Control: Emerging Technologies, Taiwan, 1995.

[2]. Peter Marwedel, Embedded System Design. *Kluwer Academic Publishers*, Nov. 2003, ISBN 1-4020-7690-8

[3]. www.microchip.com

[4]. www.panner.com/assets/pdf/**Signet515**.pdf

[5]. http://www.baylanwatermeters.com/en/fixed-remote-meter-reading-systems.php

[6]. http://www.lktech-ic.com/elongkang/product_detail.asp?picid=21

[7]. Joerg Eberspaecher, Hans-Joerg Voegel, Christian Bettstetter. GSM Switching, Services, and Protocols, John Wiley & Sons, 2001.